DOC022.97.80489

TU5200

07/2016, Edition 2

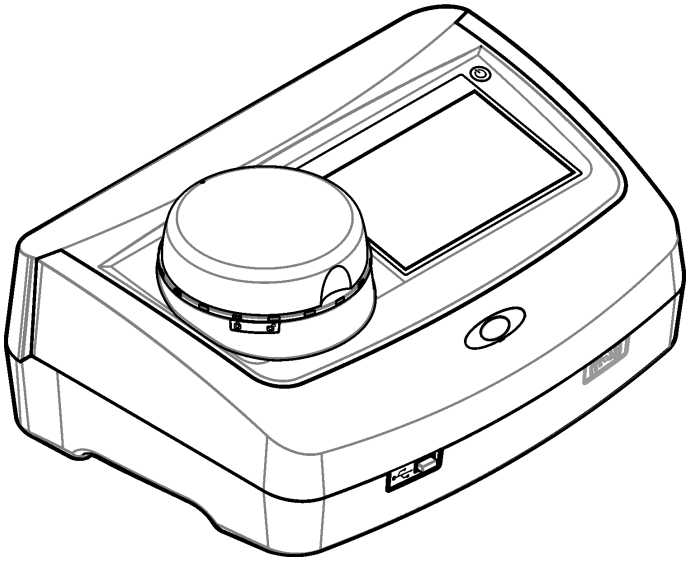

Basic User Manual
Manuel d'utilisation de base
Manual básico del usuario
Manual Básico do Usuário
基本用户手册
基本取扱説明書
기본 사용 설명서
คู่มือผู้ใช้เบื้องต้น

Table of contents

Specifications on page 3
General information on page 4
Installation on page 9
User interface and navigation on page 10
Startup on page 11
Operation on page 12
Calibration on page 20
Maintenance on page 20
Troubleshooting on page 22

Additional information

An expanded user manual is available on the manufacturer's website. Videos on how to install, operate and do maintenance and troubleshooting on the TU5200 turbidimeter are available on the *TU5 Series Turbidimeters* playlist at http://www.youtube.com/user/hachcompany.

Specifications

Specifications are subject to change without notice.

Specification	Details
Measurement method	Nephelometry with the scattered light collected at a 90° angle to the incident light and 360o around the sample vial.
Primary compliance method	DIN EN ISO 7027
Dimensions (W x D x H)	41 x 28 x 12.5 cm (16 x 11 x 7.7 in.)
Weight	2.37 kg (5.23 lb)
Enclosure	IP20
Protection class	Instrument: III; Power supply: II
Pollution degree	2
Installation category	II
Power requirements	Instrument: 15 VDC, 2 A; Power supply: 100 to 240 VAC, 50/60 Hz
Operating temperature	10 to 40 °C (50 to 104 °F)
Storage temperature	–30 to 60 °C (–22 to 140 °F)
Humidity	5 to 95% relative humidity, non-condensing
Display	17.8 mm (7 in.) color touch screen
Laser	**Class 1 laser product:** Contains a non user-serviceable class 1 laser.
Optical light source	850 nm, maximum 0.55 mW
Measurement units	NTU, FNU, TE/F, FTU, EBC, mg/L, mNTU[1] or mFNU
Range	0 to 1000 FNU, FNU, TE/F, FTU; 0 to 100 mg/L; 0 to 250 EBC
Accuracy	± 2% or ± 0.01 NTU (the larger value) from 0 to 40 FNU ± 10% of reading from 40 to 1000 FNU based on Formazin primary standard at 25 °C (77 °F)
Linearity	Better than 1% for 0 to 40 NTU on Formazin at 25 °C (77 °F)

[1] 1 mNTU = 0.001 NTU

Specification	Details
Precision	< 40 NTU: 0.002 NTU or 1% (the larger value); > 40 NTU: 3.5% based on Formazin primary standard at 25 °C (77 °F)
Stray light	< 0.01 FNU
Calibration options	**StablCal®:** 1-point calibration (20 FNU) for 0 to 40 FNU measurement range; 2-point calibration (20 and 600 FNU) for 0 to 1000 FNU (full) measurement range **Formazin:** 2-point calibration (20 FNU and dilution water) for 0 to 40 FNU measurement range; 3-point calibration (20 FNU, 600 FNU and dilution water) for 0 to 1000 FNU (full) measurement range **Degrees:** 3-point calibration (20 and 100 mg/L and dilution water) for 0 to 100 mg/L (full) measurement range **SDVB:** 3-point calibration (20 FNU, 600 FNU and dilution water) for 0 to 1000 FNU (full) measurement range **Custom:** 2- to 6-point custom calibration for a measurement range of 0 FNU to the highest calibration point.
Verification options	Glass verification rod (secondary turbidity standard) < 0.1 NTU, StablCal or Formazin (0.1 to 40 NTU)
Verification (RFID or Link2SC®)	Process and laboratory measurements are compared with RFID or Link2SC for verification of the measurement value.
Certifications	CE compliant; US FDA accession number: 1420492-xxx. This product complies with IEC/EN 60825-1 and to 21 CFR 1040.10 in accordance with Laser Notice No. 50. Australian RCM.
Warranty	1 year (EU: 2 years)

General information

In no event will the manufacturer be liable for direct, indirect, special, incidental or consequential damages resulting from any defect or omission in this manual. The manufacturer reserves the right to make changes in this manual and the products it describes at any time, without notice or obligation. Revised editions are found on the manufacturer's website.

Safety information

NOTICE

The manufacturer is not responsible for any damages due to misapplication or misuse of this product including, without limitation, direct, incidental and consequential damages, and disclaims such damages to the full extent permitted under applicable law. The user is solely responsible to identify critical application risks and install appropriate mechanisms to protect processes during a possible equipment malfunction.

Please read this entire manual before unpacking, setting up or operating this equipment. Pay attention to all danger and caution statements. Failure to do so could result in serious injury to the operator or damage to the equipment.

Make sure that the protection provided by this equipment is not impaired. Do not use or install this equipment in any manner other than that specified in this manual.

Use of hazard information

⚠ DANGER

Indicates a potentially or imminently hazardous situation which, if not avoided, will result in death or serious injury.

⚠ WARNING

Indicates a potentially or imminently hazardous situation which, if not avoided, could result in death or serious injury.

⚠ CAUTION
Indicates a potentially hazardous situation that may result in minor or moderate injury.

NOTICE
Indicates a situation which, if not avoided, may cause damage to the instrument. Information that requires special emphasis.

Precautionary labels

Read all labels and tags attached to the instrument. Personal injury or damage to the instrument could occur if not observed. A symbol on the instrument is referenced in the manual with a precautionary statement.

	Electrical equipment marked with this symbol may not be disposed of in European domestic or public disposal systems. Return old or end-of-life equipment to the manufacturer for disposal at no charge to the user.
	This symbol, if noted on the instrument, references the instruction manual for operation and/or safety information.
	This symbol indicates that a risk of electrical shock and/or electrocution exists.
	This symbol indicates the need for protective eye wear.
	This symbol indicates a laser device is used in the equipment.
	This symbol identifies a risk of chemical harm and indicates that only individuals qualified and trained to work with chemicals should handle chemicals or perform maintenance on chemical delivery systems associated with the equipment.
	This symbol indicates radio waves.

Class 1 laser product

⚠ DANGER	
	Personal injury hazard. Never remove covers from the instrument. This is a laser-based instrument and the user risks injury if exposed to the laser.

	Class 1 laser product, IEC60825-1:2014, 850 nm, maximum 0.55 mW Location: Rear of the instrument.
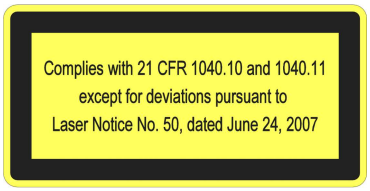	Conforms to U.S. regulations 21 CFR 1040.10 and 1040.11 in accordance with Laser Notice No. 50. Location: Rear of the instrument.

This instrument is a Class 1 Laser product. There is invisible laser radiation when the instrument is defective and when the instrument lid is open. This product complies with EN 61010-1, "Safety Requirements for Electrical Equipment for Measurement, Control and Laboratory Use" and with IEC/EN 60825-1, "Safety of Laser Products" and with 21 CFR 1040.10 in accordance with Laser Notice No. 50. Refer to the labels on the instrument that supply laser information.

RFID module

Instruments with the optional RFID module receive and transmit information and data. The RFID module operates with a frequency of 13.56 MHz.

RFID technology is a radio application. Radio applications are subject to national conditions of authorization. The use of instruments with the optional RFID module is currently permitted in the regions that follow:

Turkey, Serbia, Macedonia, Australia, Canada, US, Chile, Ecuador, Venezuela, Mexico, Brazil, South Africa, India, Singapore, Argentina, Columbia, Peru and Panama

The use of instruments with the optional RFID module outside of the above-mentioned regions can violate national laws. The manufacturer reserves the right also to get authorization in other countries. In case of doubt, contact the manufacturer.

Safety information for RFID modules

⚠ WARNING

Multiple hazards. Do not disassemble the instrument for maintenance. If the internal components must be cleaned or repaired, contact the manufacturer.

⚠ WARNING

Electromagnetic radiation hazard. Do not use the instrument in dangerous environments.

NOTICE

This instrument is sensitive to electromagnetic and electromechanical interference. These interferences can have an effect on the analysis performance of this instrument. Do not put this instrument near equipment that can cause interference.

Obey the safety information that follows to operate the instrument in accordance with local, regional and national requirements.

- Do not operate the instrument in hospitals and equivalent establishments or near medical equipment, such as pace makers or hearing aids.
- Do not operate the instrument near highly flammable substances, such as fuels, highly flammable chemicals and explosives.
- Do not operate the instrument near combustible gases, vapors or dust.
- Keep the instrument away from strong vibration or shock.

- The instrument can cause interference in immediate proximity to televisions, radios and computers.
- The warranty does not cover improper use or wear.

FCC conformance for RFID

This instrument may contain a registered radio frequency identification device (RFID). Refer to Table 1 for the Federal Communications Commission (FCC) registration information.

Table 1 Registration information

Parameter	Value
FCC identification number (FCC ID)	YUH-QR15HL
IC	9278A-QR15HL
Frequency	13.56 MHz

Certification

Canadian Radio Interference-Causing Equipment Regulation, IECS-003, Class A:

Supporting test records reside with the manufacturer.

This Class A digital apparatus meets all requirements of the Canadian Interference-Causing Equipment Regulations.

Cet appareil numérique de classe A répond à toutes les exigences de la réglementation canadienne sur les équipements provoquant des interférences.

FCC Part 15, Class "A" Limits

Supporting test records reside with the manufacturer. The device complies with Part 15 of the FCC Rules. Operation is subject to the following conditions:

1. The equipment may not cause harmful interference.
2. The equipment must accept any interference received, including interference that may cause undesired operation.

Changes or modifications to this equipment not expressly approved by the party responsible for compliance could void the user's authority to operate the equipment. This equipment has been tested and found to comply with the limits for a Class A digital device, pursuant to Part 15 of the FCC rules. These limits are designed to provide reasonable protection against harmful interference when the equipment is operated in a commercial environment. This equipment generates, uses and can radiate radio frequency energy and, if not installed and used in accordance with the instruction manual, may cause harmful interference to radio communications. Operation of this equipment in a residential area is likely to cause harmful interference, in which case the user will be required to correct the interference at their expense. The following techniques can be used to reduce interference problems:

1. Disconnect the equipment from its power source to verify that it is or is not the source of the interference.
2. If the equipment is connected to the same outlet as the device experiencing interference, connect the equipment to a different outlet.
3. Move the equipment away from the device receiving the interference.
4. Reposition the receiving antenna for the device receiving the interference.
5. Try combinations of the above.

Product overview

The TU5200 turbidimeter measures low turbidity mostly in finished drinking water applications. This laboratory instrument is factory calibrated and measures scattered light at an angle of 90° in a 360° radius around the axis of the incident light beam. Use the touch screen to operate the instrument. Refer to Figure 1.

An optional RFID module is available. Figure 1 shows the RFID module. The RFID module lets process and laboratory turbidity measurements be easily compared.

Videos on how to install, operate and do maintenance and troubleshooting on the TU5200 turbidimeter are available on the *TU5 Series Turbidimeters* playlist at http://www.youtube.com/user/hachcompany.

For the accessories, refer to the expanded user manual on the manufacturer's website.

Figure 1 Product overview

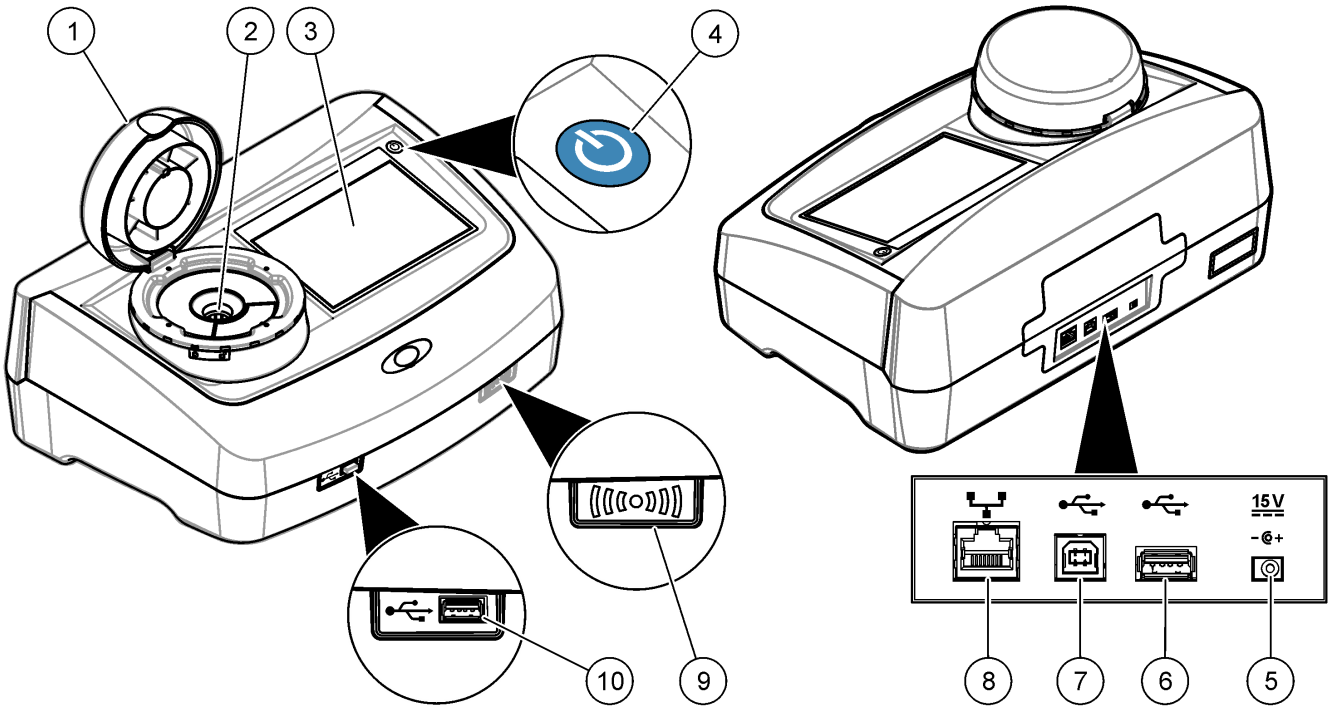

1 Lid	**6** USB port type A
2 Vial compartment	**7** USB port type B
3 Display	**8** Ethernet port for LAN connection
4 Power button	**9** RFID module indicator (optional)
5 Power supply connection	**10** USB port type A

Product components

Make sure that all components have been received. Refer to Figure 2. If any items are missing or damaged, contact the manufacturer or a sales representative immediately.

Figure 2 Product components

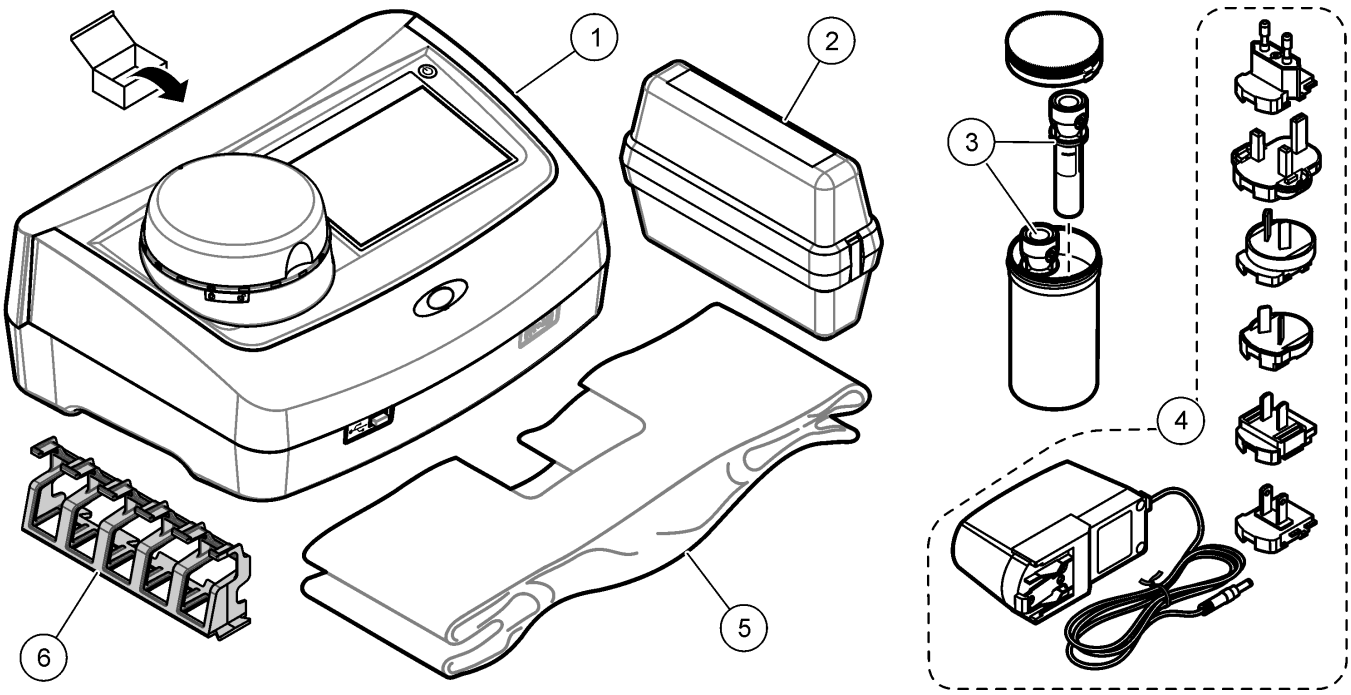

1	TU5200	**4**	Power supply with adapters
2	StablCal kit, sealed vials with RFID (10, 20 and 600 NTU)	**5**	Dust cover
3	Sample vials	**6**	Vial stand

Installation

⚠ CAUTION

Multiple hazards. Only qualified personnel must conduct the tasks described in this section of the document.

This instrument is rated for an altitude of 3100 m (10,710 ft) maximum. Use of this instrument at an altitude higher than 3100 m can slightly increase the potential for the electrical insulation to break down, which can result in an electric shock hazard. The manufacturer recommends that users with concerns contact technical support.

Installation guidelines

Install the instrument:

- On a level surface
- In a clean, dry, well ventilated, temperature controlled location
- In a location with minimum vibrations that has no direct exposure to sunlight
- In a location where there is sufficient clearance around it to make connections and to do maintenance tasks
- In a location where the power button and power cord are visible and easily accessible

Connect to external devices (optional)

The instrument has three USB 1.1 ports and one Ethernet port. Refer to Figure 1 on page 8.

USB type A port—Connect to a printer, barcode handset scanner, USB flash drive, keyboard[2] or SIP 10 module.

USB type B port—Not used.

Ethernet port—Connect to a LAN with a shielded cable (e.g., STP, FTP, S/FTP). The maximum length of the shielded cable is 20 m (65.6 ft). To set up a LAN connection at the instrument, refer to the expanded user manual on the manufacturer's website .

Note: *USB cables must not be longer than 3 m (9.8 ft).*

User interface and navigation

The instrument display is a touch screen. Only use a clean, dry finger tip to navigate the functions of the touch screen. Do not use writing tips of pens or pencils or other sharp objects to make selections on the screen or damage to the screen will occur.

Refer to Figure 3 for an overview of the home screen.

Figure 3 Display overview

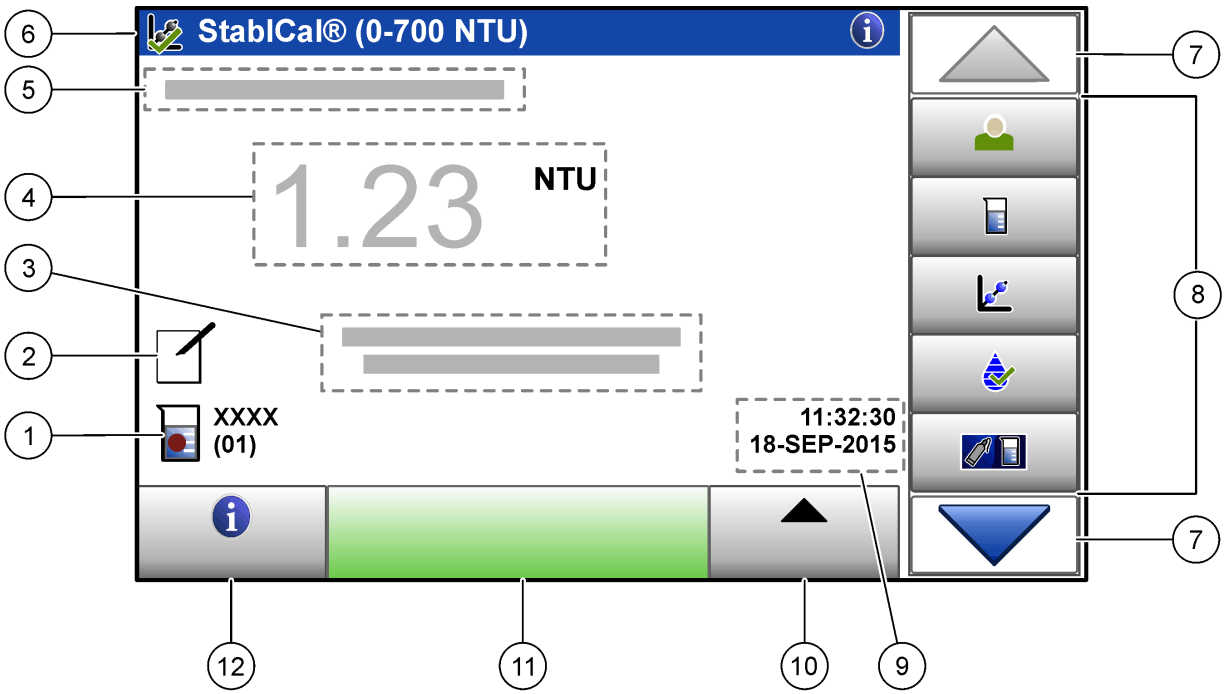

1	Sample ID and measurement number[3]	**7**	UP/DOWN navigation arrows
2	User comments	**8**	Sidebar menu (refer to Table 2)
3	Instructions	**9**	Time and date
4	Turbidity value, unit and reading mode	**10**	Options button
5	Warning or error message	**11**	Read button
6	Calibration status icon and calibration curve	**12**	Information (help) button

[2] As an alternative to the touchscreen, use a keyboard to enter text into text boxes on the display (e.g., passwords and sample IDs).

[3] The measurement number increases by one each time a measurement is completed.

Table 2 Sidebar menu icons

Icon	Description
Login	Logs in or logs out an operator. To log in, select an operator ID and then push **Login**. To log out, push **Logout**. ***Note:*** *When an operator is logged in, the Login icon changes to the icon selected for the operator ID (e.g., fish, butterfly or soccer ball) and the text "Login" changes to the operator ID.*
Sample ID	Selects the sample ID.
Calibration	Starts a calibration.
Verification	Starts a verification.
Link2SC	Compares process and laboratory measurements.
Data Log	Shows the reading log, calibration log, verification log and compare log. Refer to Show the recorded data on page 18.
Setup	Configures the instrument settings. Refer to Configure the instrument settings on page 12.
Diagnostics	Shows the firmware information, instrument backup, instrument updates, signaling information and factory service data.
Timer	Sets a timer.
	Goes to the manufacturer's website for the latest software versions and user manual when the instrument has a LAN connection.
Documents	Shows the user manual and video(s) for the instrument.

Startup

⚠ CAUTION	
	Personal injury hazard. Never remove covers from the instrument. This is a laser-based instrument and the user risks injury if exposed to the laser.

⚠ CAUTION	
	Personal injury hazard. Do not look into the vial compartment when the instrument is connected to power.

Refer to the illustrated steps that follow to connect power to the instrument and start the instrument. When the language menu shows, select the language and then push **OK**. The self-check will start.

Note: *To change the language after the initial startup, refer to* Change the language *on page 13.*

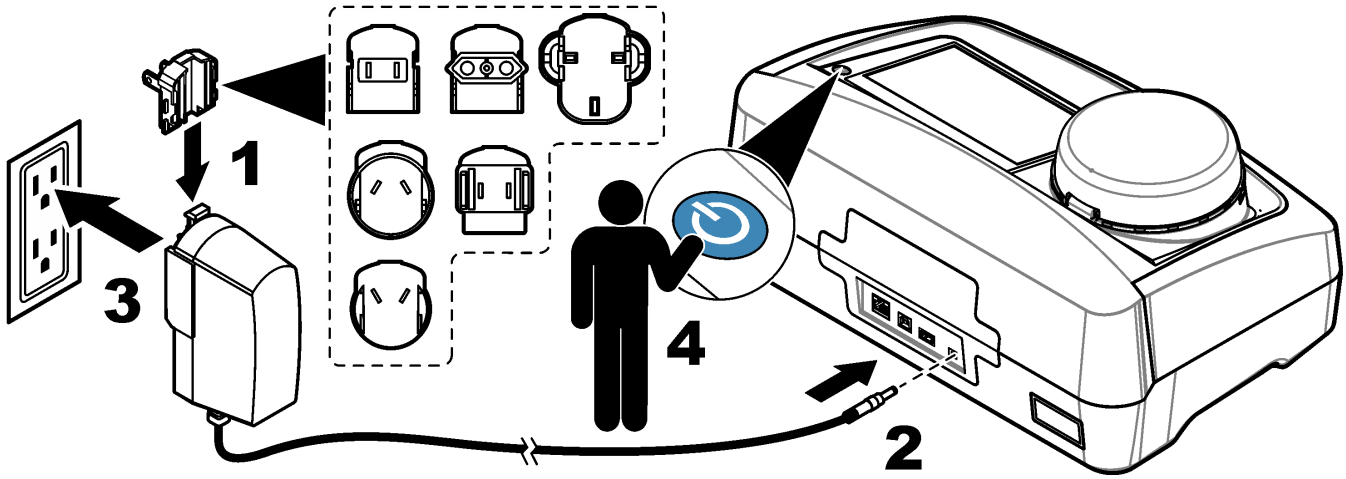

Operation

Configuration

Configure the instrument settings

1. Push ▼ two times, then push **Setup**.
2. Select an option.

Option	Description
Location	Sets the location name of the instrument. The location is saved with measurements to the data log.
Date & Time	Sets the date format, the time format and the date and time. Enter the current date and time. **Date Format**—Sets the date format. Options: dd-mmm-yyyy (default), yyyy-mm-dd, dd-mm-yyyy or mm-dd-yyyy. **Time Format**—Sets the time format. Options: 12 or 24 hours (default).
Security	Enables or disables password protection for the settings and tasks in the security list. **Security Password**—Sets or changes the security (administrator) password (10 characters maximum). Passwords are case sensitive. **Security List**—Sets the security level for each setting and task in the security list. • **Off**—All operators can change the setting and or do the task. • **One key**—Only operators with a one-key or two-key security level can change the setting or do the task. Refer to Add operator IDs on page 13. • **Two keys**—Only operators with a two-key security level can change the setting or do the task. ***Note:*** *The Security setting is not set to on until Close is pushed.*
Sound Settings	Enables or disables the sound settings for individual events. Sets the sound volume for each event (1 to 10). To enable or disable all of the sound settings, select All and then push **Setup**.

Option	Description
Network & Peripherals	Shows the connection status of the devices that are directly connected to the instrument and connected to the instrument by LAN (local area network). • Printer—Local printer or network printer • Network—LAN connection • Controller—sc controller(s) • PC • USB Memory—USB flash drive • Keyboard
Power Management	Sets when the instrument is automatically set to sleep mode or off after a period of no activity. **Sleep Timer**—Sets when the instrument is set to sleep mode. Options: OFF, 30 minutes, 1 (default), 2 or 12 hours. **Power-Off Timer**—Sets when the instrument is set to off. Options: OFF, 2, 6, 12 (default) or 24 hours.

Change the language

NOTICE

Wait a minimum of 20 seconds after the power is set to off before the power is set to on again or damage to the instrument can occur.

To change the language after the initial startup, do the steps that follow.

1. Set the instrument to off.
2. Set the instrument to on.
3. During startup, touch the display until the language menu shows (approximately 45 seconds).
4. When the language menu shows, select the language and then push **OK**.

Add operator IDs

Add a unique operator ID for each person who will measure samples (30 maximum). Select an icon, operator password and security level for each operator ID.

1. Push **Login**.
2. Push **Options**>**New**.
3. Enter a new operator ID (10 characters maximum), then push **OK**.
4. Push the **LEFT** and **RIGHT** arrows to select the icon for the operator ID (e.g., fish, butterfly or soccer ball).
5. Push **Operator Password**, then enter a password for the operator ID.

   Note: *Passwords are case sensitive.*
6. Push **Security Level**, then select the security level for the operator ID.

   - **Off**—The operator cannot change the settings or do the tasks in the Security settings that have a security level of one key or two keys.
   - **One key**—The operator can change all the settings and do all the tasks in the Security settings that have a security level of off or one key.
   - **Two keys**—The operator can change all the settings and do all the tasks in the Security settings.

   Note: *Before a security level can be selected, the Security setting must be set to on. Refer to* Configure the instrument settings *on page 12.*
7. Push **OK**>**Close**.
8. To edit an operator ID, select the operator ID and then push **Options**>**Edit**.
9. To delete an operator ID, select the operator ID and then push **Options**>**Delete**>**OK**.

Configure an operator RFID tag (optional)

To use an operator RFID tag to log in to the instrument, save the applicable operator ID to an operator RFID tag as follows:

1. Push **Login**.
2. Select the operator ID, then push **Options**>**Initialize RFID Tag**.
3. Enter the password for the operator ID as necessary.
4. Complete the steps that show on the display.
5. Push **OK** to replace the operator ID on the RFID tag with a new operator ID if applicable.
6. Push **Close**.
7. Put the operator RFID tag in front of the RFID module to log in.

Add sample IDs

Add a unique sample ID for each sample (100 maximum). The sample ID identifies the sample location or other sample specific information.

As an alternative, import sample IDs from a spreadsheet file to the instrument. Refer to the expanded user manual on the manufacturer's website to import sample IDs.

Note: *When a sample bottle with a sample RFID sticker is put in front of the RFID module, the sample ID is automatically added to the instrument and selected on the instrument.*

1. Push **Sample ID**.
2. Push **Options**>**New**.
3. Enter a new sample ID (20 characters maximum).
4. If the sample bottle has a barcode that identifies the sample ID, read the barcode with a barcode handset scanner that is connected to the instrument. The barcode is added to the sample ID.
5. Push **OK**.
6. Select an option.

Option	Description
Add Date/Time	Adds the data and time that the sample was collected to the sample ID (optional). The date and time entered for each sample ID show on the Sample ID menu.
Add Number	Adds a measurement number to the sample ID (optional). Select the first number used for the measurement number (0 to 999). The measurement number shows in parenthesis after the sample ID on the home screen. Refer to Figure 3 on page 10.
Add Color	Adds a colored circle to the sample ID icon (optional). The sample ID icon shows before the sample ID on the home screen. Refer to Figure 3 on page 10.

7. Push **OK**>**Close**.
8. To edit a sample ID, select the sample ID and then push **Options**>**Edit**>**OK**.
9. To delete a sample ID, select the sample ID and then push **Options**>**Delete**>**OK**.

Configure the measurement settings

Select the reading mode, measurement units, data log settings, resolution and more.

1. At the main reading screen, push **Options**>**Reading Setup**.
2. Select an option.

Option	Description
Reading	Sets the reading mode to single, continuous or minimum mode. Default: Single. **Single**—The measurement stops when the reading is stable. **Continuous**—The measurement continues until the user pushes **Done**. **Minimum Mode**—Set to on when a process and laboratory measurement are compared and the process measurement is a lower NTU range. Removes the effect of non-representative particles in the grab sample. **Signal Avg**—The turbidity reading that shows on the display is an average of the values measured during the time interval selected. Options: For single measurement mode, 5 to 15 seconds. For continuous measurement mode, 5 to 90 seconds.
Unit	Selects the measurement units that show on the display and that are recorded to the data log. Options: NTU, FNU, TE/F, FTU, EBC, mNTU or mFNU. Default: FNU).
Data Log Setup	Sets the data log settings. **Auto Store**—Measurement data is automatically recorded in the reading log. Default: On. When not selected, push **Options**>**Store** to record the current measurement to the reading log as necessary. **Send Data Format**—Sets the output format of measurement data that is sent to external devices (CSV or XML). Default: XML. **Print Format**—Sets the output format of measurement data that is sent to a printer (Quick Print or Detailed Print (GLP)). **Comments**—Lets users add comments to log entries. **Auto Send**—Measurement data is automatically sent to all of the devices (e.g., printer, USB flash drive and FTP server) that are connected to the instrument after each measurement.
Resolution	Selects the number of decimal places that show on the display. Options: 0.001 (default) or 0.0001.
Bubble Reject	Sets the bubble reject to on (default) or off. When set to on, high turbidity readings caused by bubbles in the sample are not shown or saved to the data log.
Close lid to start reading	Enables or disables the instrument to start a measurement automatically when the lid is closed. Default: On. A measurement is only done when there is a sample vial in the instrument.

Set the acceptance range

Before process and laboratory measurements are compared on the instrument, set the acceptance range for the compare results. The acceptance range is the maximum difference permitted between the process and laboratory measurements.

1. Push **LINK2SC**.
2. Push **Options**>**Compare Setup**.
3. Push **Acceptance Range**>**Unit**.
4. Select an option.

Option	Description
%	Sets the acceptance range to a percentage (1 to 99%).
NTU	Sets the acceptance range to NTU units (0.015 to 100.00 NTU).

5. Push **Value**, then enter the acceptance range.

Measurement

Sample collection

- Collect samples in clean glass or plastic bottles with tight-fitting caps.
- Rinse the container a minimum of three times with the sample.

- When collecting a sample from a water tap in a distribution system or treatment plant, turn the water on for at least five minutes, then collect the sample. Do not adjust the flow because this can add particles.
- When collecting a sample from a body of water (e.g., a stream or storage tank), collect at least one liter (1 quart) and fully mix before taking an aliquot for measurement. If the quality of the sample source is not constant, collect samples at many locations at different depths as necessary. Then, mix the samples together to prepare one sample for measurement.
- Fill the container. Let the container overflow with the sample and then immediately put the cap on the sample container so that there is no headspace (air) above the sample.
- Write the sample information on the container.
- Start analysis as soon as possible to prevent temperature changes, bacteria growth and settling.

Prevent vial contamination

NOTICE

Do not to touch or scratch the glass of the sample vial. Contamination or scratches on the glass can cause measurement errors.

The glass must stay clean and have no scratches. Use a no-lint cloth to remove dirt, fingerprints or particles from the glass. Replace the sample vial when the glass has scratches.

Refer to Figure 4 to identify where not to touch the sample vial. Always keep the sample vials in the vial stand to prevent contamination on the bottom of the vial.

Figure 4 Sample vial overview

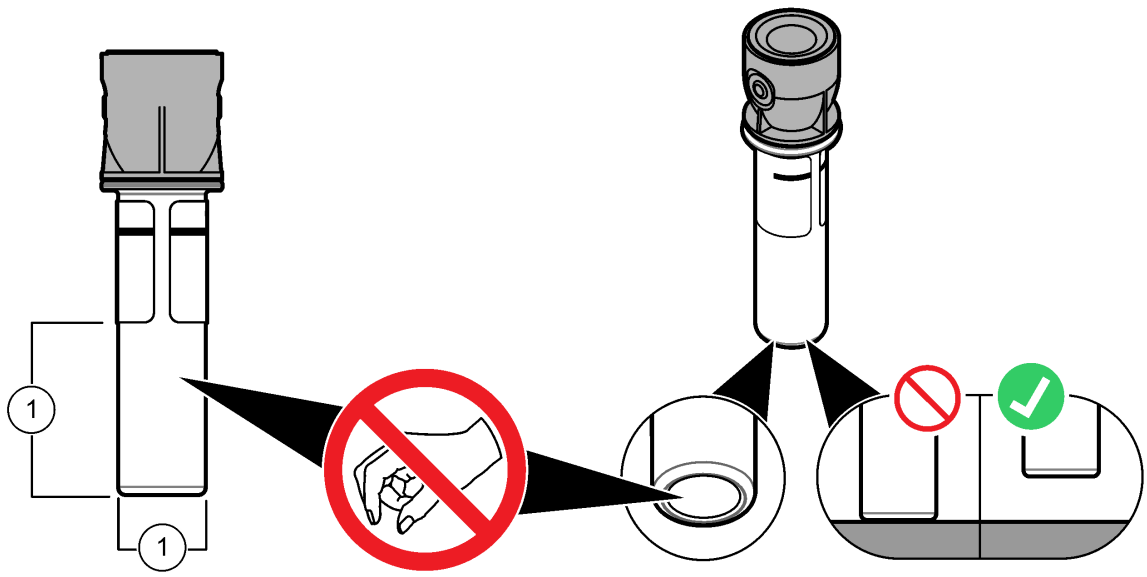

1	Measurement surface—Do not touch.

Prepare a sample vial

⚠ CAUTION

Chemical exposure hazard. Dispose of chemicals and wastes in accordance with local, regional and national regulations.

NOTICE

Always put a cap on the sample vial to prevent spills in the vial compartment.

Refer to the illustrated steps that follow to prepare a sample vial for measurement. Measure the sample immediately.

Note: *If there is contamination in the sample vial after it is rinsed with the sample, clean the sample vial. Refer to* Clean a sample vial *on page 21.*

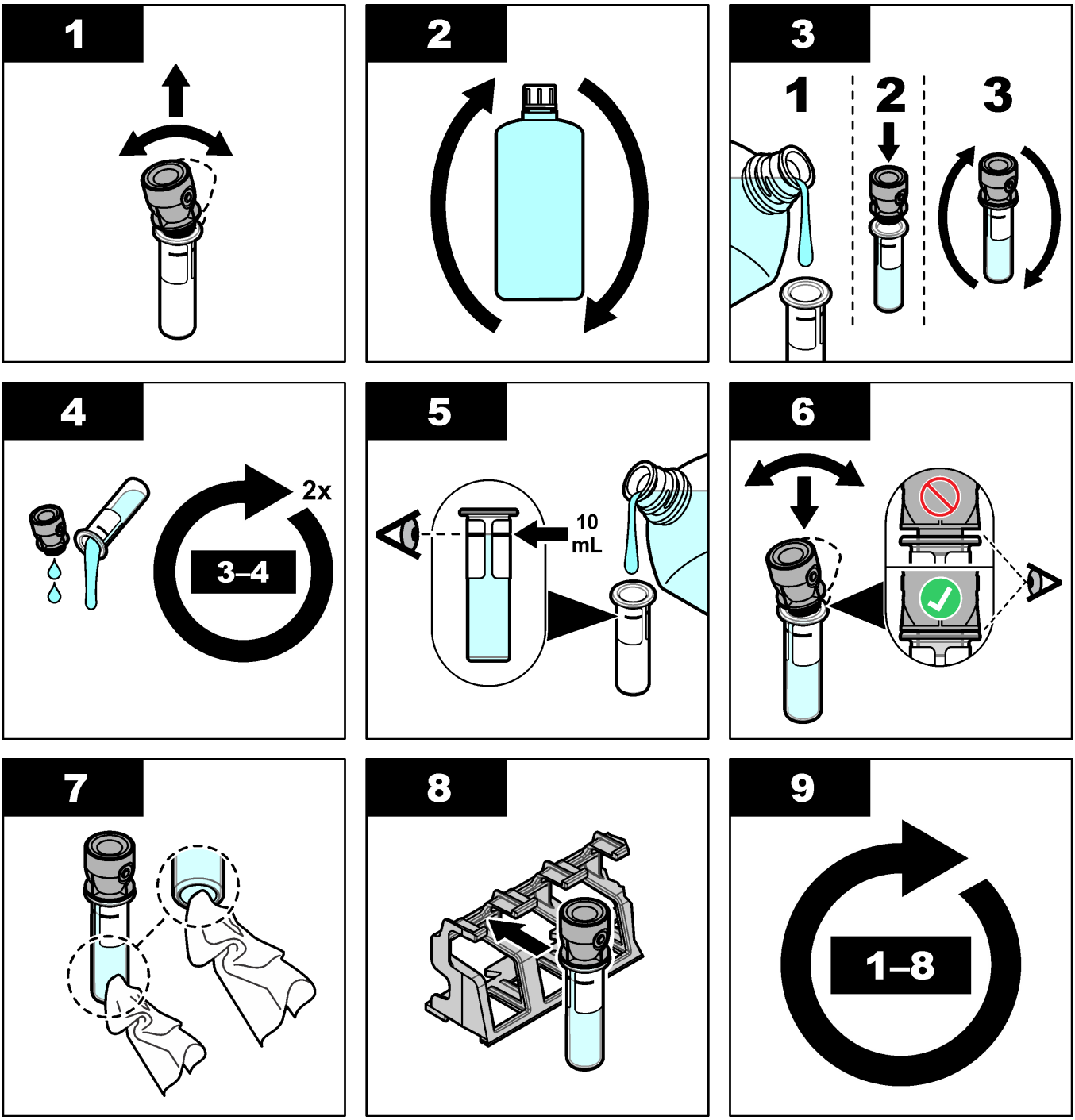

Put the vial in the instrument

⚠ CAUTION

Personal injury hazard. Never remove covers from the instrument. This is a laser-based instrument and the user risks injury if exposed to the laser.

⚠ CAUTION

Personal injury hazard. Do not look into the vial compartment when the instrument is connected to power.

NOTICE

Keep the lid closed to keep contamination out of the vial compartment.

1. Log in to the instrument as follows:
   - Put an operator RFID tag in front of the RFID module or
   - Push **Login**. Select the applicable operator ID, then push **Select**.
2. Select the sample ID as follows:
   - Put the sample RFID sticker on the sample bottle in front of the RFID module or
   - Push **Sample ID**. Select the applicable sample ID, then push **Select**.

   Note: *To add sample IDs to the instrument, refer to* Add sample IDs *on page 14.*
3. Clean the sample vial with a no-lint cloth to remove contamination.
4. Dry the external surfaces of the vial with a no-lint cloth. Make sure to dry the bottom of the vial.
5. Put the sample vial in the vial compartment. Refer to the illustrated steps that follow.

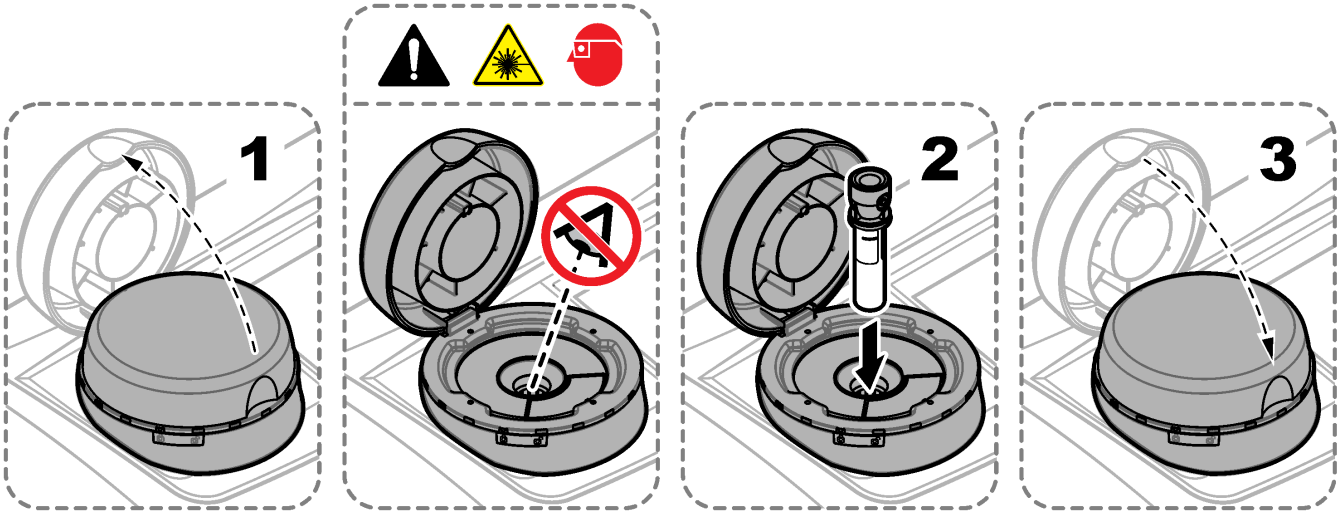

Measure the sample

1. Push **Read** if a measurement does not start automatically when the lid is closed.
2. When the measurement is complete, push **Options**>**Store** to record the measurement to the reading log as necessary.

   Note: *If the Auto Save setting is set to on, "Data Stored" shows on the display and the measurement is automatically recorded to the reading log.*
3. To show the recorded measurements, push **Options**>**Reading Log**. Refer to Show the recorded data on page 18 for more options.
4. To send the measurement data to external devices that are connected to the instrument, push **Options**>**Send Data**. Refer to Show the recorded data on page 18 for more options.

   Note: *If the Auto Send settings is set to on, the measurement data is automatically sent to the external device(s) that is connected to the instrument.*

Compare process and laboratory measurements

Pre-requisites: Configure the acceptance range. Refer to Set the acceptance range on page 15.

Refer to the TU5300 sc/TU5400 sc documentation to compare process and laboratory measurements.

Show the recorded data

All the recorded data is kept in the data log. The data log is divided into four logs:

- **Reading log**—Shows the recorded measurements.
- **Calibration log**—Shows the calibration history.
- **Verification log**—Shows the verification history.
- **Compare log**—Shows the recorded comparisons of process and laboratory measurements.

1. Push **Data Log** and select the applicable log to show.
2. To show the details of a log entry, select the log entry and then push **View Details**.

   Note: *To add a comment to the log entry, push the comments icon.*
3. To only show the log entries recorded during a time interval or with a specific operator ID or sample ID, do the steps that follow.

   a. Push **Filter**, then select On.
   b. Select an option.

Option	Description
Time Interval	Selects the time interval.
Operator ID	Selects the operator ID.
Sample ID	Selects the sample ID. This option only shows when Reading Log or Compare Log is selected.

4. To send log data to a device (e.g., printer or USB flash drive), delete a log entry or show a compare log or reading log entries in a graph, do the steps that follow.

   a. Push **Options**.
   b. Select an option.

Option	Description
Delete	Removes one of the items that follow. • The selected log entry • The log entries for a time interval • The log entries with a specific operator ID • The log entries with a specific sample ID[4] • All the entries in the selected log
Send Data	Sends one of the items that follow to all the devices that are directly connected to the instrument (e.g., printer or USB flash drive) and connected to the instrument by LAN (network printer or FTP server). • The selected log entry • The log entries for a time interval • The log entries with a specific operator ID • The log entries with a specific sample ID[4] • All the entries in the selected log
View Graph	Shows the reading log entries that have the same sample ID in a graph. This option only shows when Compare Log or Reading Log is selected. To add the log entries for another sample ID to the graph, push **Options**>**Add Data**. Select a sample ID to add to the graph. To show the details of a data point, touch a data point on the display or push the **LEFT** and **RIGHT** arrows to select a data point. **Data points**—Selects the symbol used for the data points. **Control Limit**—Sets the minimum value and maximum value of the readings that show on the graph.

[4] This option only shows when Reading Log or Compare Log is selected.

Calibration

⚠ WARNING

Chemical exposure hazard. Obey laboratory safety procedures and wear all of the personal protective equipment appropriate to the chemicals that are handled. Refer to the current safety data sheets (MSDS/SDS) for safety protocols.

The instrument is factory calibrated and the laser light source is stable. The manufacturer recommends that a calibration verification be done periodically to make sure that the system operates as intended. The manufacturer recommends calibration after repairs or comprehensive maintenance work.

Refer to the expanded user manual on the manufacturer's website to calibrate the instrument and do a calibration verification.

Maintenance

⚠ CAUTION

Multiple hazards. Only qualified personnel must conduct the tasks described in this section of the document.

⚠ CAUTION

Chemical exposure hazard. Obey laboratory safety procedures and wear all of the personal protective equipment appropriate to the chemicals that are handled. Refer to the current safety data sheets (MSDS/SDS) for safety protocols.

⚠ CAUTION

Personal injury hazard. Never remove covers from the instrument. This is a laser-based instrument and the user risks injury if exposed to the laser.

NOTICE

Do not disassemble the instrument for maintenance. If the internal components must be cleaned or repaired, contact the manufacturer.

Clean spills

⚠ CAUTION

Chemical exposure hazard. Dispose of chemicals and wastes in accordance with local, regional and national regulations.

1. Obey all facility safety protocols for spill control.
2. Discard the waste according to applicable regulations.

Clean the instrument

Clean the exterior of the instrument with a moist cloth, and then wipe the instrument dry.

Clean a sample vial

⚠ CAUTION	
	Chemical exposure hazard. Obey laboratory safety procedures and wear all of the personal protective equipment appropriate to the chemicals that are handled. Refer to the current safety data sheets (MSDS/SDS) for safety protocols.

Clean the sample vial when there is contamination in the sample vial after the sample vial is rinsed.

Items to collect:

- Hydrochloric acid (concentration 10%)
- Laboratory cleaning detergent for glass (concentration 0.1%)
- Distilled or deonized water
- Dilution water
- Vial wiper (optional)
- No-lint cloth

1. Put the exterior and interior surfaces of the sample vial and the cap in 10% hydrochloric acid for 15 minutes.
2. Clean the exterior and interior surfaces of the sample vial and the cap with laboratory cleaning detergent for glass (concentration 0.1%).
3. Fully rinse the sample vial three times with distilled or deionized water.

   Note: *If the sample vial is used to measure low range turbidity samples or dilution water, rinse with dilution water (not distilled or deionized water).*
4. For the best results, clean the sample vial with the optional vial wiper. Then fully rinse the sample vial again. Refer to Figure 5.
5. Dry the external surfaces of the sample cell with a soft, no-lint cloth. Do not let the sample vial air dry.
6. For storage, fill the sample vial with distilled or demineralized water.

   Note: *If the sample vial is used to measure low range turbidity samples or dilution water, fill the sample vial with dilution water (not distilled or deionized water).*
7. Immediately put the cap on the sample vial to keep the interior of the sample vial wet.

Figure 5 Clean the vial with the vial wiper (optional)

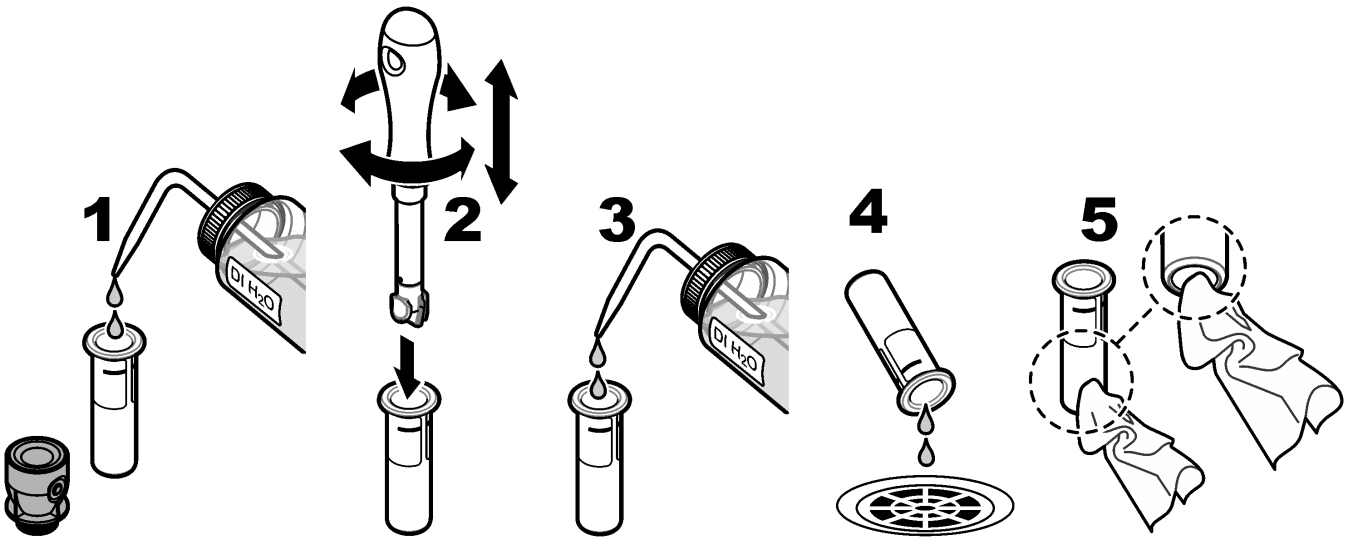

Clean the vial compartment

Clean the vial compartment only when the compartment has contamination. Make sure that the tool to clean the vial compartment has a soft surface and does not damage the instrument. Table 3 shows the options on how to clean the vial compartment.

Table 3 Cleaning options

Contaminant	Options
Dust	Vial compartment wiper, micro fiber cloth, lint-free cloth
Liquid, oil	Cloth, water and cleaning agent

Troubleshooting

Refer to the expanded user manual on the manufacturer's website for troubleshooting information.